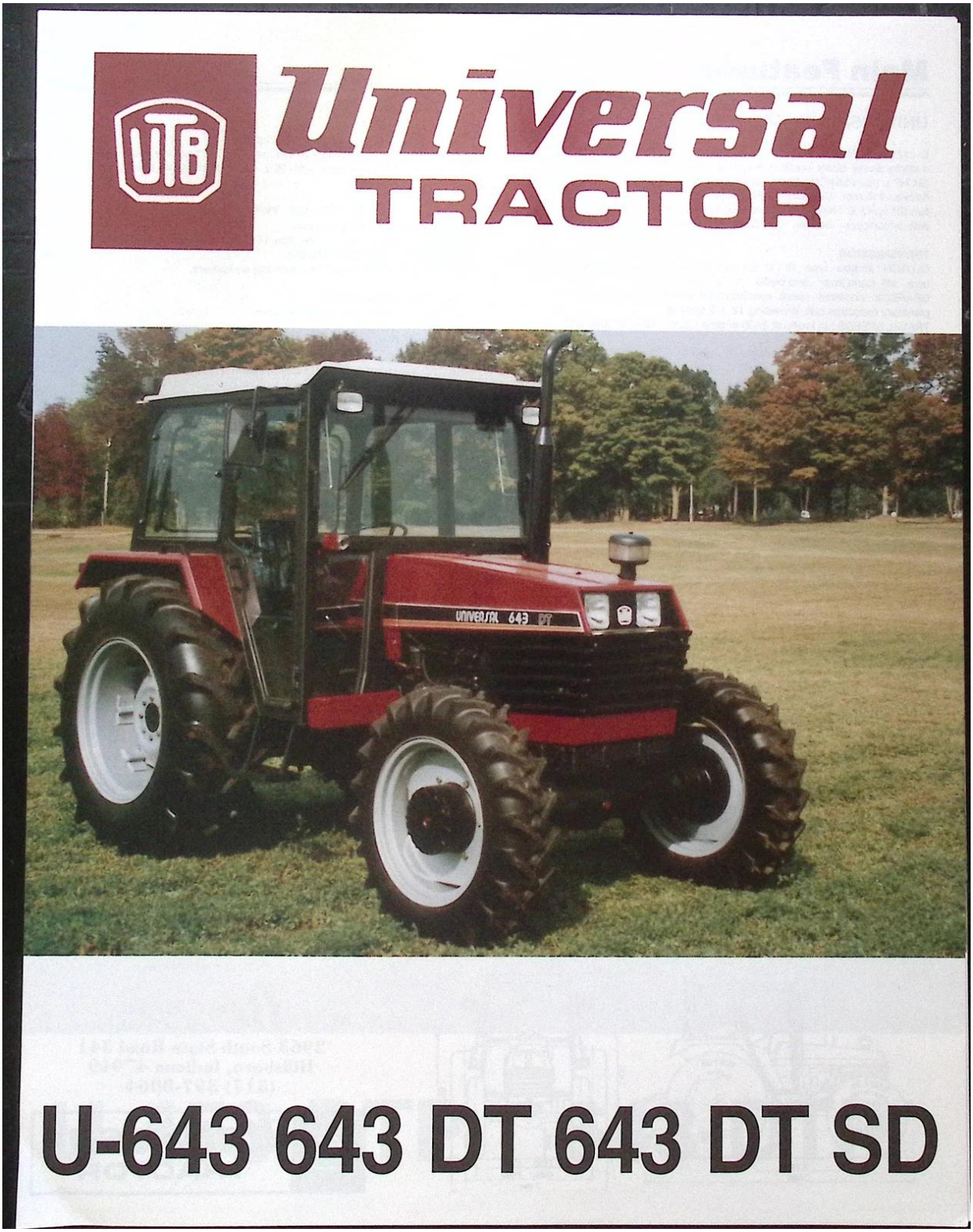

FIG. I (pagina frontală)

Main Features

UNIVERSAL U - 643 643 DT 643 DT SD

D - 121.050 ENGINE
4 stroke diesel, direct injection, 4 cylinders, water cooled, 47.05 kW (64 HP), (IS0 2534/DIN 70020) at 2400 r.p.m. Bore : 102 mm. Stroke : 110 mm. Capacity : 3595 cu.cm. Max, torque : 206 Nm (21 kpm) at 1400 r.p.m. Compression ratio 17:1. Oil - bath air cleaner with cyclonicpre - cleaner. Distributor - type injection pump, CAV licence.

TRANSMISSION
CLUTCH : friction - type , Ø 11", dry plates, dual (for gearbox and power take - off), hand lever - and pedal - controlled.
GEARBOX : constant - mesh, synchronized, with 4 + 1 speeds and planetary reduction unit, providing 12 + 3 speeds.
TRAVEL SPEEDS : in km/h, at 2400 engine r.p.m. , 16.9 -30 tires and 14/47 bevel couple.

Gear	High	Low	Creeping
1st	10.68	2.96	0.96
2nd	16.07	4.46	1.45
3rd	23.53	6.54	2.12
4th	30.39	8.44	2.73
Reverse	15.35	4.26	1.38

DIFFERENTIAL LOCK : pedal - actuated and automatic return to " OFF " position.

STEERING : hydrostatic, with independent hydraulic circulation and transversal ram.

BRAKES
SERVICE BRAKES : with oil - immersed discs, separately or simultaneously pedal - actuated.
PARKING BRAKE : independent, disc type, hand lever - controlled.

WHEELS AND AXLES (for 2 wheel drive)
FRONT AXLE : swinging, telescopic - type , U - section welded construction.
FRONT WHEELS : 7.5/5.5F - 20
REAR WHEELS : 16.9/w15 -30
FRONT TRACK : adjustable 55 " - 78.5 "
REAR TRACK : adjustable 55.5 " - 75.1 "
MINIMUM TURNING RADIUS : 12.5 '

ELECTRIC EQUIPMENT
VOLTAGE : 12 V . 3 kW starter. 500 W alternator. 150Ah battery. Complete electric equipment for lighting and signalling.
INSTRUMENT PANEL : electronic speed counter, electric hourmeter, warning lights for : full beam operation, flasher operation, fuel level, applied handbrake, water thermometer and fuel level gauge.

POWER TAKE - OFF
INDEPENDENT : 540 r.p.m. and 1000 r.p.m.
SYNCHRONOUS : providing 2.87 rev. per metre of tractor travel or 4.74 rev. per metre of tractor travel with 16.9 - 30 tires and 14/47 bevel couple.

HYDRAULIC SYSTEM
HYDRAULIC UNIT , MONOBLOCK - TYPE : 2 additional rams, providing automatic draft or position control.
HYDRAULIC PUMP : gear - type, flow 15 GPM at 2400 engine r.p.m..
OPERATING PRESSURE : 150 bar.
REMOTE CONTROL VALVE : for working equipment.

THREE - POINT LINKAGE
2nd category, with adjustable lifting rods.

MAXIMUM LIFTING CAPACITY : 2100 daN/4630 lbs.

SEAT : adjustable according to driver's weight and reach.

FUEL TANK : 16.4 GAL.

TRACTOR WEIGHT : frame incl., in operating condition : 6150 LBS.

ROPS with seat belt.

OPTIONAL EQUIPMENT
TOWING AND HITCHING ATTACHMENTS :
- Front towing attachment
- Swinging drawbar
- Single - axle trailer coupling
- Toolbar
- Deluxe cabin
- Canopy
- Front end loader

GEARBOX ; with reversing transmission, covering 8 + 8 speeds for shuttle drive version.

WHEELS AND AXLES (for 4 wheel drive)
FRONT AXLE ; drive, swinging - type, with central drive unit, differential, reduction gears in wheel hubs.
FRONT WHEELS : 11.2/W10 - 24 optional : 9.5/W8 - 24.
REAR WHEELS : 16.9/W15 - 30.
FRONT TRACK : adjustable 54 " - 62.2 "
REAR TRACK : adjustable 59 " - 90.5 "
MINIMUM TURNING RADIUS : 16.7 '
OTHER MODELS AVAILABLE :

TYPE	FRONT WHEELS	REAR WHEELS
U - 643 L	7.5 X 20	12.4 X 36
U - 643 V	6.00 X 16	12.4 X 28
U - 643 DTE	14.9 X 28	14.9 X 28

Note: Conversion from metric to inches: mm x .03937 = inches

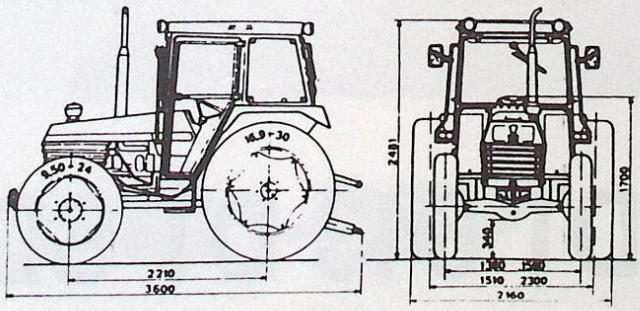

Data and illustrations are informative. Subject to change without notice.

Itc Universal TRACTOR
2963 South State Road 341
Hillsboro, Indiana 47949
(317) 397-8064

Universal TRACTOR

FIG. II (pagina spate)